Project _____

Item # _____

Quantity _____

Flav-R-Savor®
Heated Air Curtain Cabinets

Models: FS2HAC-15, -2PT, -4PT

The patented Hatco Flav-R-Savor® Heated Air Curtain effectively and safely holds hot food hot without the use of doors allowing immediate access to product.

The models have warm air at the front and back of the cabinet which is forced downward through the ducts above the opening which forms a “curtain” of heated air. A portion of the heated air is drawn toward the center and sides of the cabinet warming each pan evenly.

The pass through units are ideal for holding wrapped product like tortillas, burritos and ribs, as well as product on sheet pans like biscuits, chicken, hamburger patties, pizza and baked potatoes. Holding temperatures range from 80°F to 200°F (27°- 93°C).

The smaller, single opening unit is perfect for those custom food orders that are assembled with pre-prepared food items. Holding them ready and warm.

FS2HAC-2PT with accessory full size sheet pans

FS2HAC-4PT with accessory full size sheet pans

FS2HAC-15 with standard wire rack (food pans not included)

Standard features

- Patented air baffle and duct design create consistent temperature and peak product holding on each pan
- Doorless design allows easy access to food product from both sides (excludes FS2HAC-15)
- FS2HAC-15 is a single opening specialty warmer that includes a removable nickel plated wire rack that holds six (6) 1/3 size pans (pans not included). Also includes a removeable crumb tray, USB port and a touch screen control with temperature and timer display
- FS2HAC-2PT accommodates two (2) full-size sheet pans or four (4) half-size sheet pans and an exterior that comes standard in *Designer* Black
- FS2HAC-4PT accommodates four (4) full-size sheet pans or eight (8) half-size sheet pans and an exterior that comes standard in *Designer* Black

Accessories

☐ 4" (102 mm) Legs

IFS anti-microbial coatings use naturally-occurring, environmentally sustainable, silver ions to help inhibit the growth of microbes on the powder coated surface. See www.hatcocorp.com/antimicrobial-paint for more information.

For operation, location and safety information, please refer to the Installation and Operating Manual.

ANSI/NSF 4

(CE for FS2HAC-2PT, -4PT)

MADE IN THE USA

HATCO CORPORATION | P.O. Box 340500 Milwaukee, WI 53234-0500 U.S.A. | (800) 558-0607 | (414) 671-6350

www.hatcocorp.com | support@hatcocorp.com | Find a Hatco Rep | Image Library | Document Library | Chat

Flav-R-Savor® Heated Air Curtain Cabinets

Models: FS2HAC-15, -2PT, -4PT

FS2HAC-15

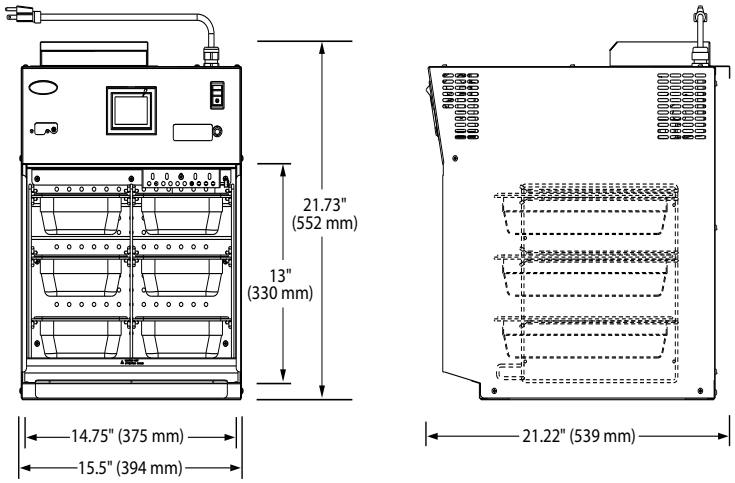

Front View

Side View

SPECIFICATIONS
Heated Air Curtain Cabinets

The shaded areas contain electrical information for International models

Model	Type	Dimensions (W x D x H) *Height includes legs*	Volts	Hz	Watts	Amps	Plug	Ship Weight*
FS2HAC-15	Open Capacity Warmer	15.5" x 21.22" x 21.73" (394 x 539 x 552 mm)	120	50-60	1105	9.2	NEMA 5-15P▲	83 lbs. (38 kg)
			220/230/240	60	1105	5.0/4.8/4.6	AS 3112	

* Shipping weight includes packaging.
▲ Canada, use NEMA 6-15P.

CORD LOCATION

Top of unit towards the back, right side.

PLUG CONFIGURATIONS

NEMA 5-15P

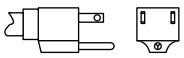

NEMA 6-15P

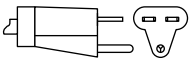

AS 3112

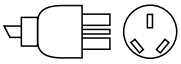

HATCO CORPORATION | P.O. Box 340500 Milwaukee, WI 53234-0500 U.S.A. | (800) 558-0607 | (414) 671-6350

www.hatcocorp.com | support@hatcocorp.com | Find a Hatco Rep | Image Library | Document Library | Chat

Flav-R-Savor® Heated Air Curtain Cabinets

Models: FS2HAC-15, -2PT, -4PT

FS2HAC-2PT

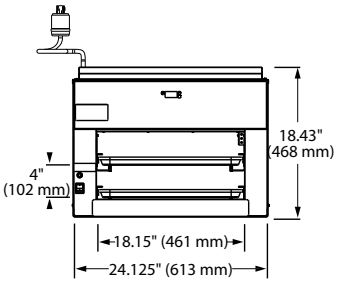

Front View

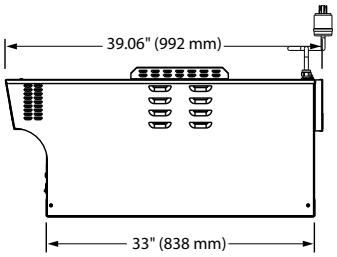

Side View

FS2HAC-4PT

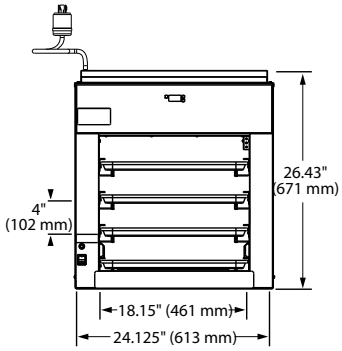

Front View

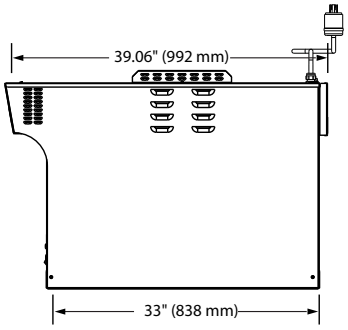

Side View

SPECIFICATIONS
Heated Air Curtain Cabinets

The shaded areas contain electrical information for International models

Model	Type	Dimensions (W x D x H) *Height includes legs*	Volts	Hz	Watts	Amps	Plug	Ship Weight*
FS2HAC-2PT	2-Tier Pass-Through	24.125" x 39.06" x 18.43" (613 x 922 x 468 mm)	120/208	60	2589	10.8	NEMA L14-20P	175 lbs. (80 kg)
			120/240	60	2589	10.8	NEMA L14-20P	
			220	60	2538	11.5	NEMA 6-20P, CEE 7/7 Schuko, BS-1363	175 lbs. (80 kg)
			240	60	3022	12.6	NEMA 6-20P	
			220-230 (CE)	50	2538-2774	11.5-12.0	CEE 7/7 Schuko, CEE 17, AS 3112	
			230-240 (CE)	50	2774-3022	12.1-12.6	BS-1363, CEE 17, AS 3112	
FS2HAC-4PT	4-Tier Pass-Through	24.125" x 39.06" x 26.43" (613 x 922 x 671 mm)	120/208	60	3389	14.2	NEMA L14-20P	211 lbs. (96 kg)
			120/240	60	3389	14.2	NEMA L14-20P	
			220	60	3338	15.2	NEMA 6-20P, CEE 7/7 Schuko, No Plug	211 lbs. (96 kg)
			240	60	3362	14	NEMA 6-20P	
			220-230 (CE)	50	3338-3646	15.2-15.9	CEE 7/7 Schuko, CEE 17, No Plug	
			230-240 (CE)	50	3080-3362	13.4-14.0	CEE 17, AS 3112, No Plug	

* Shipping weight includes packaging.

CORD LOCATION

Top of unit towards the back, left side.

PLUG CONFIGURATIONS

NEMA L14-20P

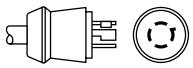

NEMA 6-20P

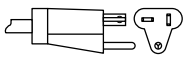

CEE 7/7 Schuko

BS-1363

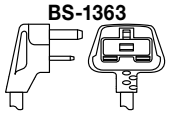

CEE 17

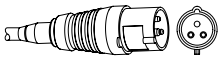

AS 3112

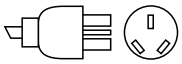

PRODUCT SPECS
Heated Air Curtain Cabinets

The patented Heated Air Curtain Cabinet shall be a Flav-R-Savor® Model ... as manufactured by the Hatco Corporation, Milwaukee, WI 53234 U.S.A.

The Heated Air Curtain shall be rated at ... watts, ... volts, and be ... inches (millimeters) in overall width. It shall consist of a powdercoated steel housing (excluding FS2HAC-15), stainless steel front panel, and metal sheathed heating elements. Heated Air Curtain features easy-to-use digital controls, an On/Off switch, (FS2HAC-15 has a USB port), and 6' (1829 mm) cord with plug.

Accessories shall include legs and food pans.

Warranty consists of 24/7 parts and service assistance (US and Canada only).

HATCO CORPORATION | P.O. Box 340500 Milwaukee, WI 53234-0500 U.S.A. | (800) 558-0607 | (414) 671-6350

www.hatcocorp.com | support@hatcocorp.com | Find a Hatco Rep | Image Library | Document Library | Chat